VER.	DATE	DESCRIPTION	DRWN
0			

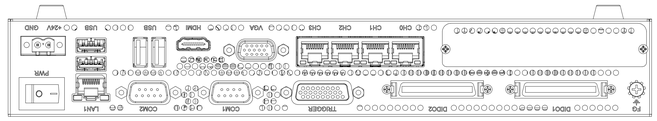

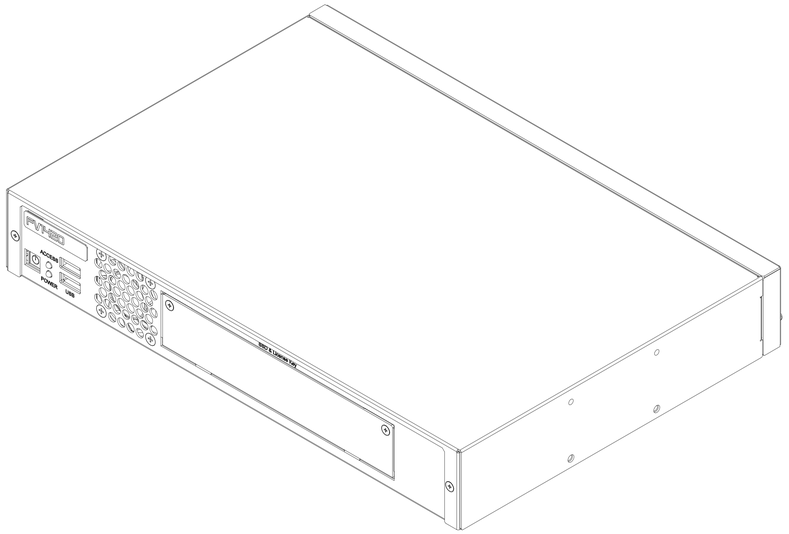

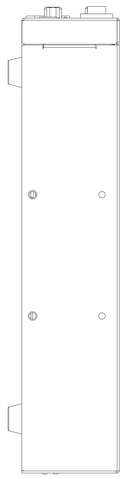

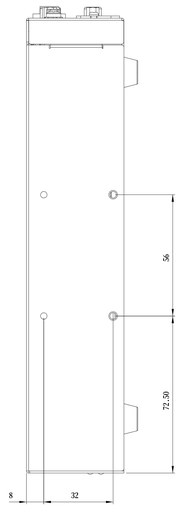

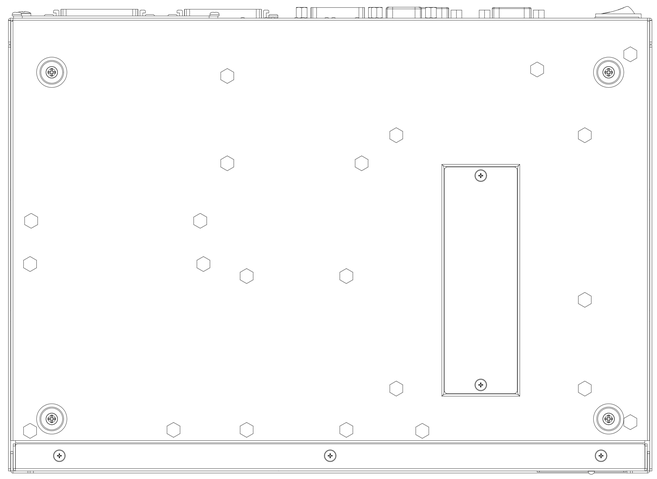

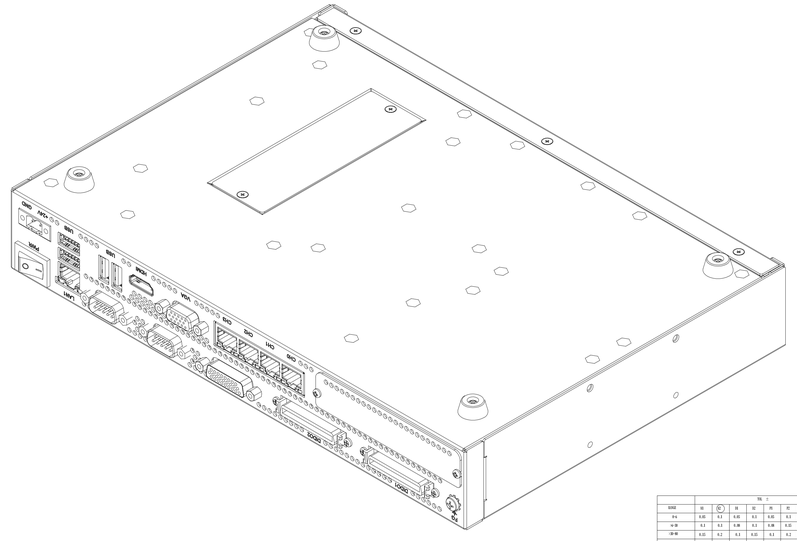

Note:
1.SHALL TO BE ENGINEERING APPROVAL, PRODUCTION TO BE IS ACCORDANCE WITH APPROVED SAMPLE.
2.DISTRIBUTED DRAWING, DO NOT COPY, USE, OR DISTRIBUTE WITHOUT PERMISSION OF THE ADLINK.
3.Inspection reference documents:Q/SQI 1002, 4316, 4317, 4327

UNIT :										
DIMENSIONS	0	(0.5)	1.0	2.0	3.0	4.0	5.0	6.0	7.0	8.0
Tol.	0.05	0.1	0.05	0.1	0.05	0.1	0.1			
±0.25	0.1	0.1	0.05	0.1	0.08	0.15	0			
±0.25	0.15	0.2	0.1	0.15	0.1	0.2	0			
±0.30	0.25	0.25	0.15	0.2	0.15	0.1	0			
±0.35	0.2	0.4	0.2	0.3	0.2	0.1	0			
±0.40	0.3	0.6	0.25	0.4	0.25	0.6	0			
ANG. TOL.	± 0°-30'		± 0.1°		30'-60'		± 0.5°	60'-90'		±

Restricted

DFT'L	"FV-Series\Q1\DCM_FV1_F20x.SLDPRT"	DF	CHAO-HO
DESIGN		MODEL	FV-F-1
DRWN	Sudar Lee	SCALE	1:1
APPRL	Jameson Lin	PART NO.	V2-F0120-2222
LAST REVISED	2022/08/12/10:02 PM		

ADLINK

DRAWING NAME	00_FV1-F20-2000
PROJECT NAME	FV1F20

VER.	DATE	DESCRIPTION	DRWN
0			

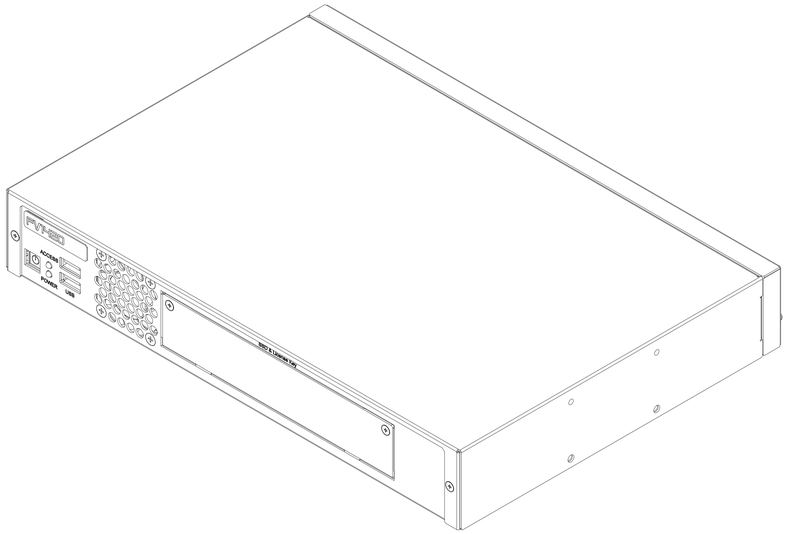

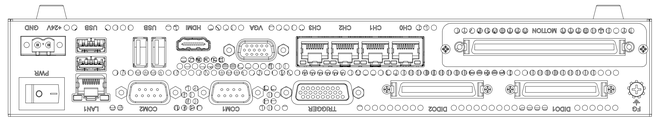

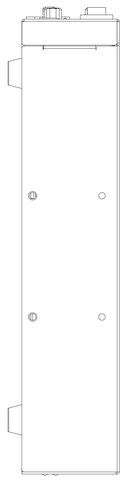

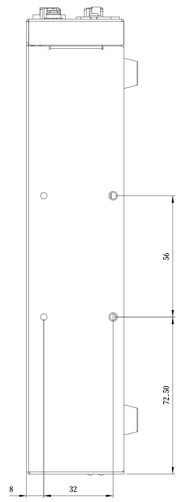

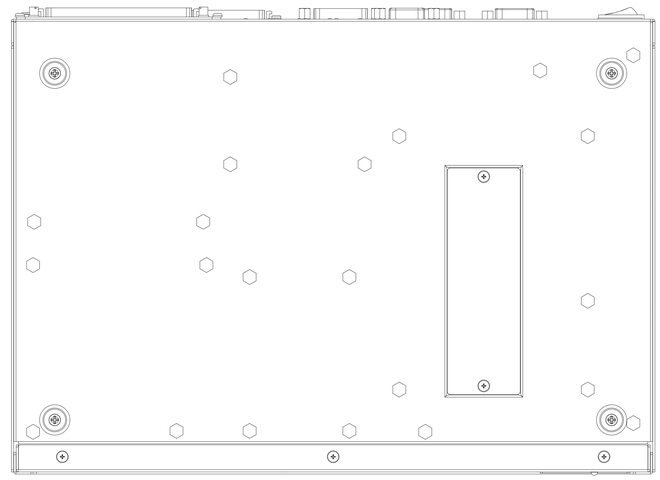

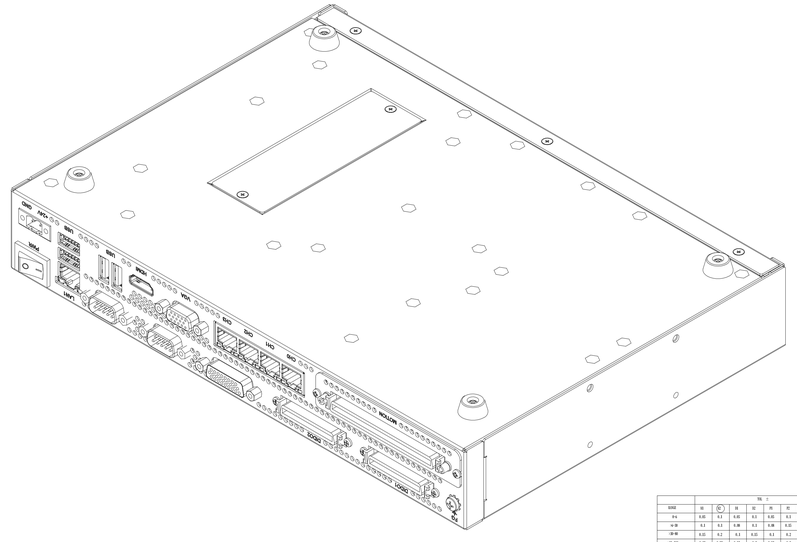

Note:
1.SHALL TO BE ENGINEERING APPROVAL, PRODUCTION TO BE IN ACCORDANCE WITH APPROVED SAMPLE.
2.REPRODUCTION MEANS, IN ANY FORM, FOR DISTRIBUTE WITHOUT PERMISSION OF THE ADLINK.
3.Inspection reference documents:Q/SQI 1002, 4104, 4107, 4117

SYMBOL	01	02	03	05	08	12	1	OTHER
P-A	0.02	0.1	0.05	0.1	0.05	0.1	0.1	
W-W	0.1	0.1	0.08	0.1	0.08	0.02	1	
CW-W	0.02	0.2	0.1	0.02	0.1	0.2	2	
HW-HW	0.05	0.05	0.05	0.2	0.05	0.1	5	
CHW-CCS	0.2	0.4	0.2	0.3	0.2	0.1	3	
CCS-HHW	0.2	0.8	0.25	0.1	0.25	0.8	4	
UNL TOL	±	0°-30°	±	0.1°	30°-60°	±	0.5°	60°-90° ±

TOL ±

TITLE	Restricted
SIZE	"FP-Rotorlx(ELEB_PE_FP_FHA-R)PCT"
DRAWN	
DESIGN	Sudar Lee
APPRO.	Jameson Lin
LAST REVISED	2022/02/23,2022 FP V2.00.24
DRAWING NAME	
PROJECT NAME	
SIZE	CHARGE
WEIGHT	2.0 g
SCALE	1:1
PART NO.	V2-FHA20-2222
	HK_FV-H20-0000
	FVH20

ADLINK

VER.	DATE	DESCRIPTION	DRAWN
0			

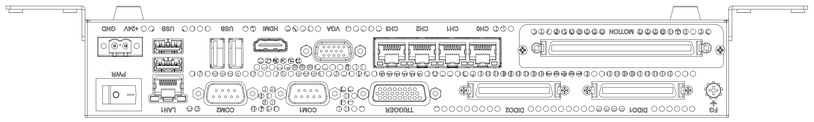

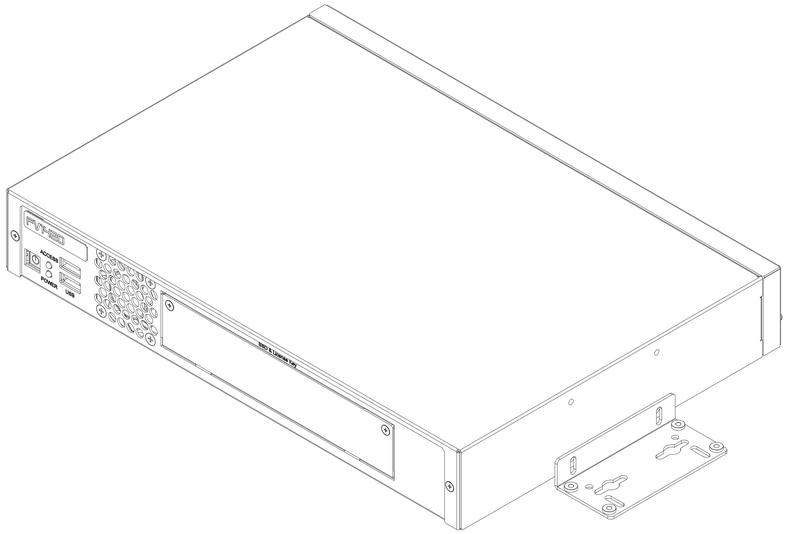

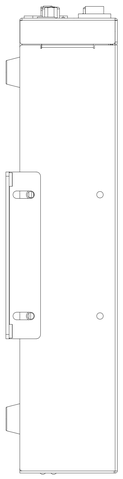

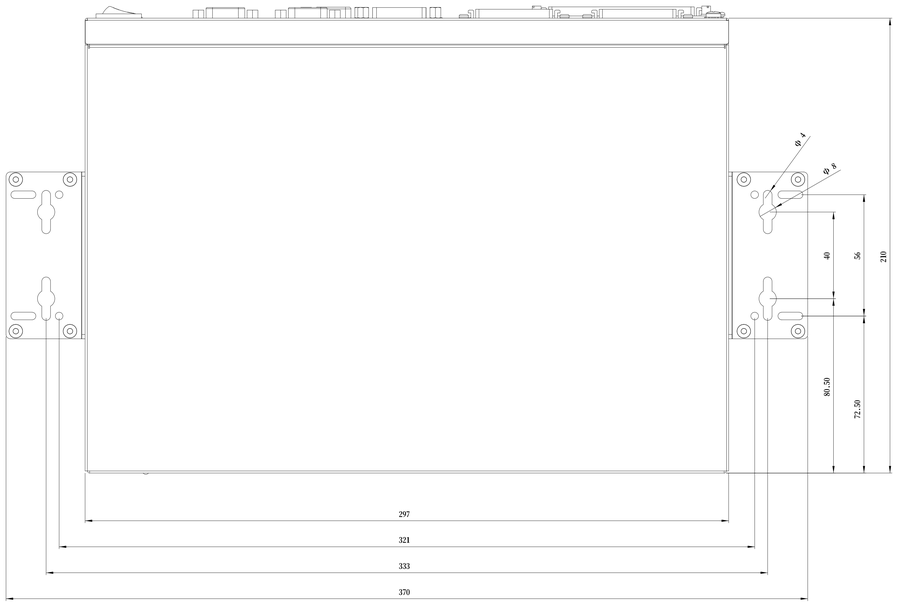

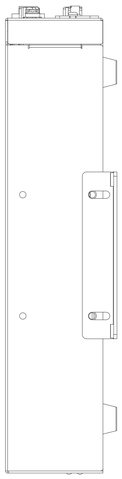

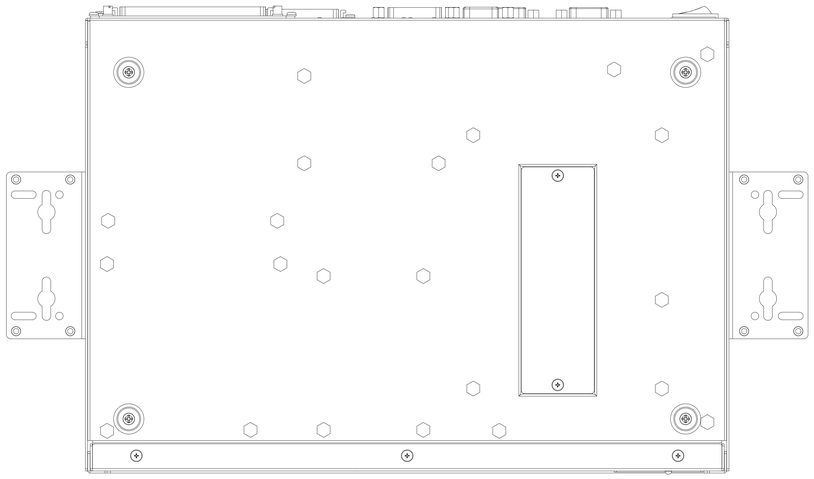

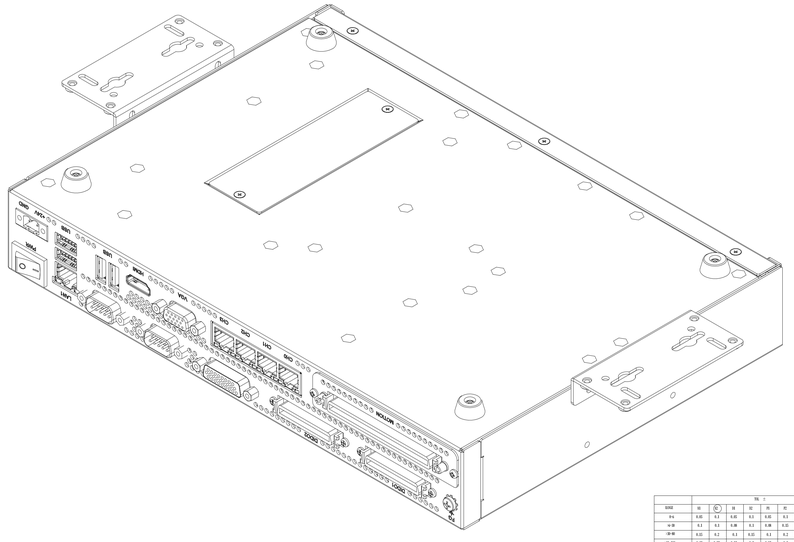

Note:
1.ANGLE TO BE ELIMINATED, UPWARD, REMOVED TO BE IN ACCORDANCE WITH APPROVED SAMPLE.

2.RESTRICTED MARKS, DO NOT COPY, COPY, OR DISTRIBUTE WITHOUT PERMISSION OF THE ADLINK.

3.Inspection reference documents Q-R23 (SQC, ROA, ROT, ROT)

	TOL ±:										
SIZE	01	02	03	04	05	06	C	CHR	DATE:	"20-Saturday(10/24_REV_FVA-R200)"	
0-6	0.05	0.1	0.05	0.1	0.05	0.1	0.1		DRAWN		
6-30	0.1	0.1	0.08	0.1	0.08	0.15	1		DESIGN	Sudo Lee	
30-60	0.15	0.2	0.1	0.15	0.1	0.2	2		APPRO.	Amazon Liu	
60-100	0.15	0.25	0.15	0.2	0.15	0.3	3		LAST REVISED	2023/02/23(Fri) 17:42:00.24	
100-150	0.2	0.4	0.2	0.3	0.2	0.3	3				
150-400	0.3	0.6	0.25	0.5	0.25	0.8	4				
DEL TOL	±0°30'		±0.1°		30'~60'		±0.1°		60'~90'	±1	

Restricted

ADLINK

SCALE	0.5
SHEET	1 OF 1
SIZE	A3
PROJECT CODE	FVA20

VER.	DATE	DESCRIPTION	DESIGN
0			

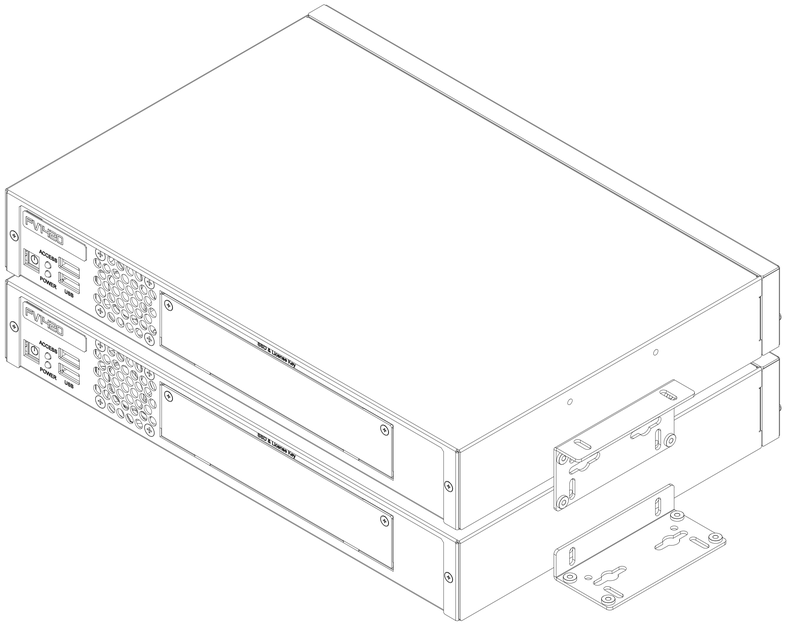

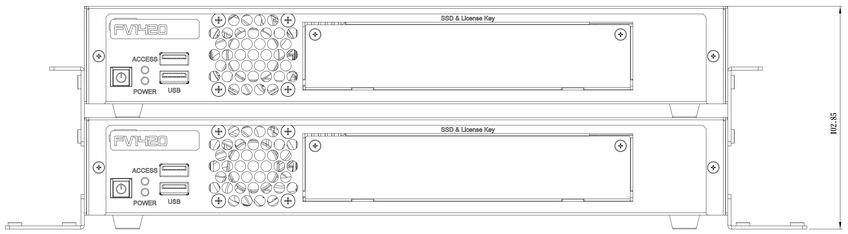

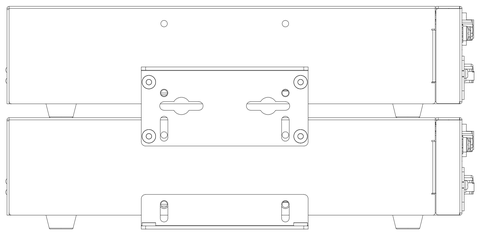

Note:
1.SAMPLE TO BE ENGINEERING APPROVAL, INSPECTION TO BE IN ACCORDANCE WITH APPROVED SAMPLE.

2.REPRODUCED DRAWING, IN WHT COPY, LITE, OR DISTRIBUTE WITHOUT PERMISSION OF THE LICENSE.

3.Inspection reference documents Q/SQI 1002, 1004, 1017, 1017

TOL :

SYMBOL	01	02	03	05	08	10	C	TOR
0~6	0.05	0.1	0.05	0.1	0.05	0.1	0.2	
>6~30	0.1	0.2	0.08	0.2	0.08	0.05	1	
>30~50	0.05	0.2	0.1	0.05	0.1	0.1	2	
>50~120	0.15	0.25	0.15	0.2	0.15	0.1	3	
>120~315	0.2	0.4	0.2	0.3	0.2	0.3	5	
>315~400	0.3	0.6	0.25	0.5	0.25	0.8	6	
ANG. TOL	±	0°~30′	0.2°	30′~60′	0.5°	60′~90′	1°	

Restricted

DFT'L	研究一部四证	SH	CHAT.LIU
PROJECT		SHEET	1 OF 1
DESIGN	Sandra Sun	SCALE	1:1
APPRO.	Automation R.&Dde	PART NO.	50-10020-0004
LAST MODD DATE:	2022/08/22/0163 PM 02:40:26		

ADLINK

DRAWING NAME	FVH520型结构图
SHEET NAME	FVH520